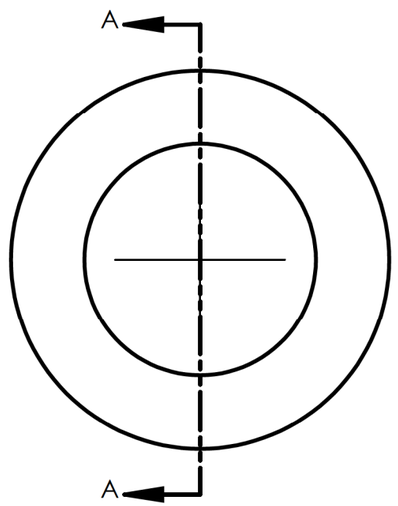

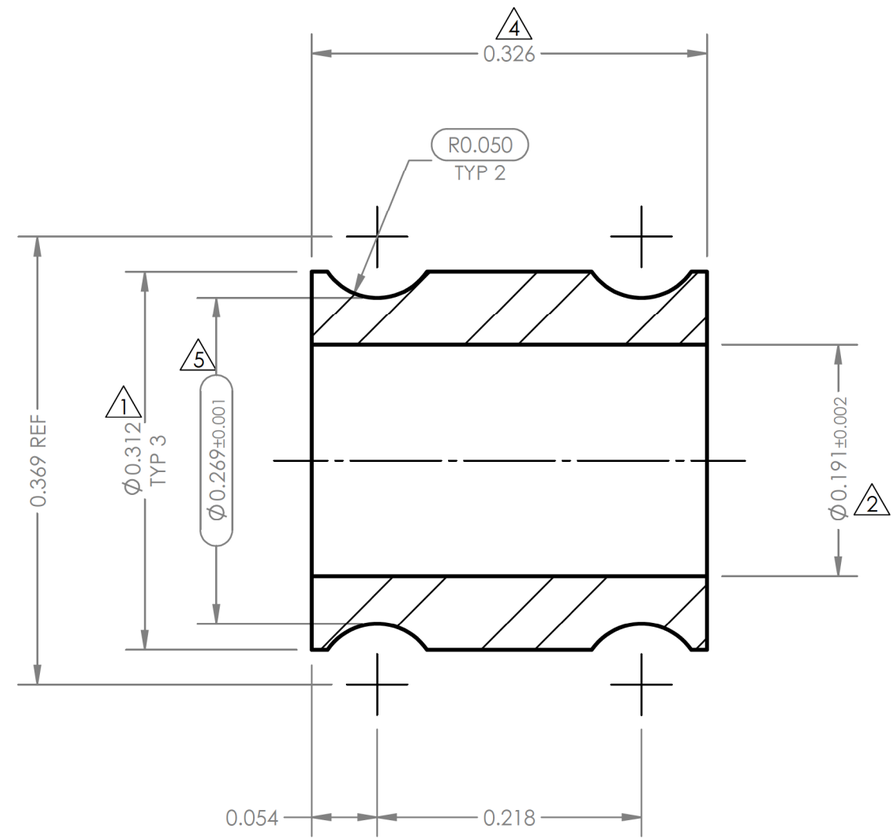

SECTION A-A

ACTUAL SIZE

REV.	DATE	REVISION DESCRIPTION	BY	ENG APR	MFG APR	ECN #
5	3/25/2021	UPDATED SHEET FORMAT, WAS AUTOCAD, ADDED FINISH, Ø0.269 WAS Ø0.270 -0.002	MDS	CJL	MKE	9348
4	5/4/1996	WAS 0.320	CJL			2064
3	2/2/1995	MATERIAL WAS 316SS	PVH			485
2	12/29/1994	WAS Ø0.194	CJL			
1	10/12/1994	WAS Ø0.301	CJL			

DIMENSIONS IN OVALS ARE KEY PRODUCT CHARACTERISTICS

UNLESS OTHERWISE SPECIFIED:
- DIMENSIONS IN INCHES
- ALL DIMENSIONS PRIOR TO FINISHING
- REMOVE ALL BURRS AND BREAK SHARP EDGES WITH 0.010 MAX RADIUS OR CHAMFER

TOLERANCES UNLESS OTHERWISE SPECIFIED:
DECIMAL: ± 0.003
ANGULAR: ± 1 °
SURFACE FINISH: 63 ✓

INNER RACE
16MM SHEAVE

MATERIAL: 304 SS 3
FINISH: PASSIVATE 5

DRAWING NUMBER	H-19102B		REV. 5
PART #	MS-098		
SHEET NUMBER: 1/1		SCALE:	8:1
DESIGN BY :	CJL	DATE:	6/28/1994
DRAWN BY :	CJL	DATE:	6/28/1994
ENG. APR :		DATE:	
MFG. APR :		DATE:	